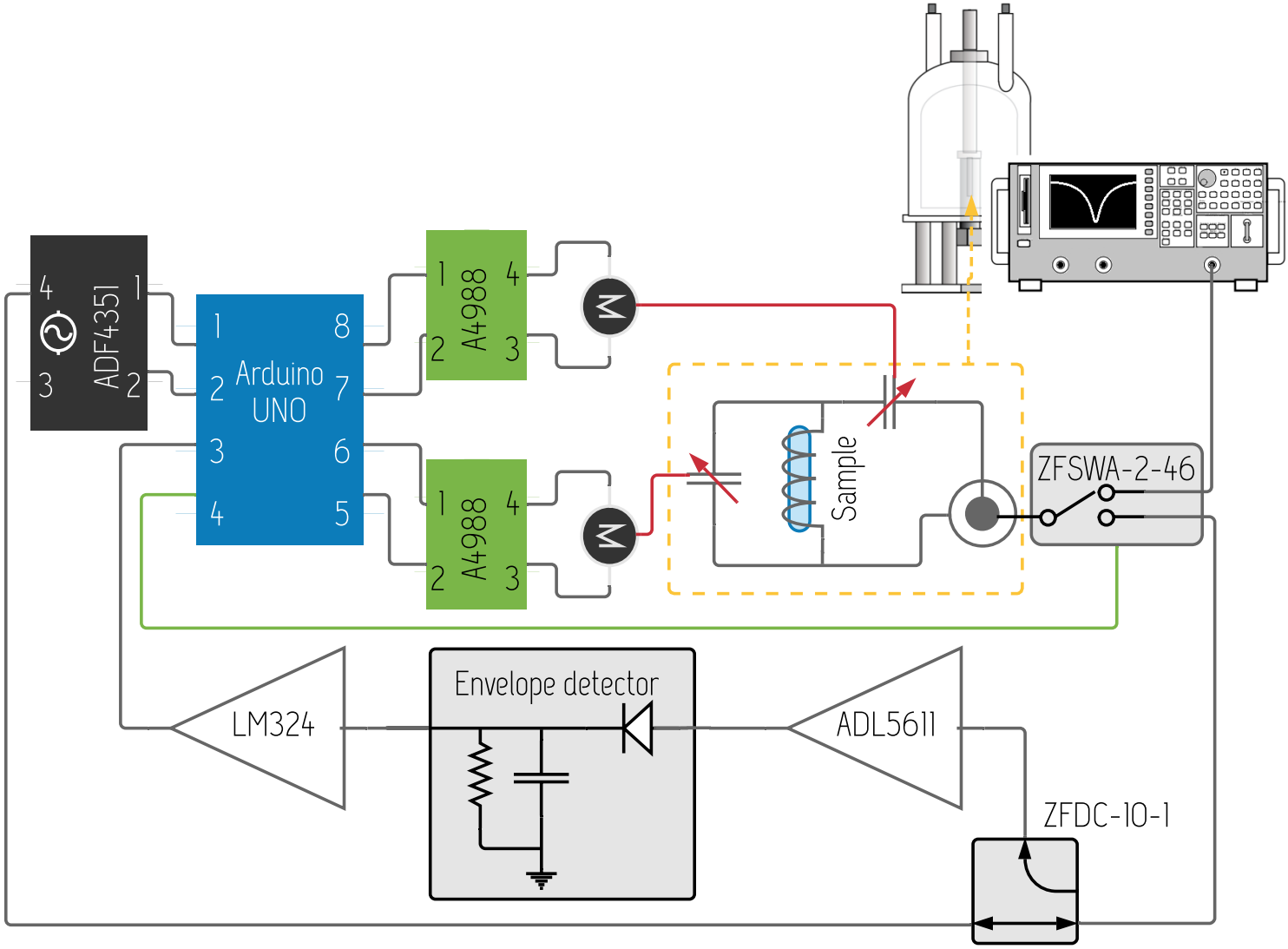
ADF4351
4
1
3
2
Arduino
UNO
1
2
3
4
8
7
6
5
A4988
1
2
4
3
A4988
1
2
4
3
Sample
ZFSWA-2-46
LM324
Envelope detector
ADL5611
ZFDC-10-1